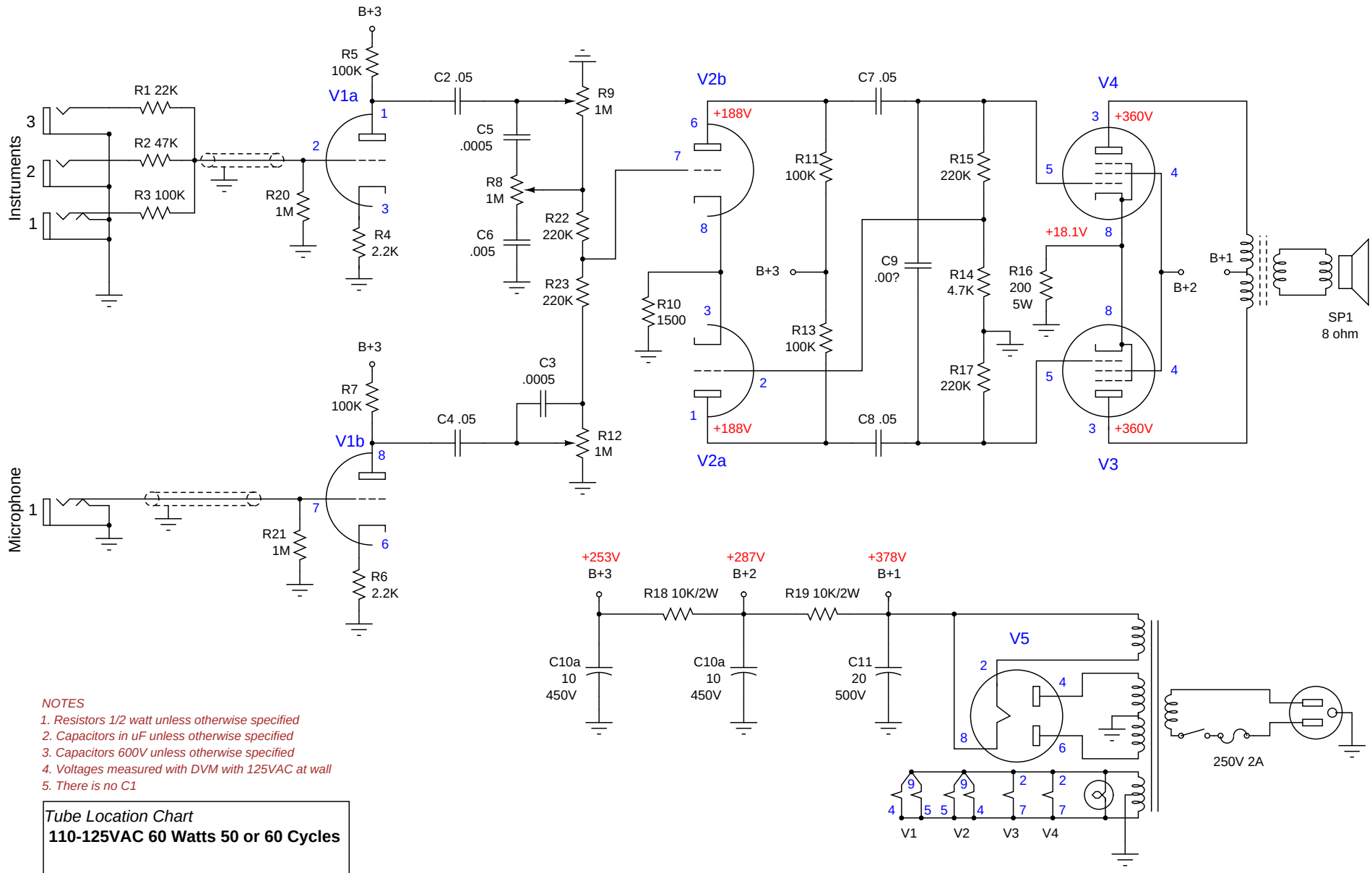

NOTES

1. Resistors 1/2 watt unless otherwise specified
2. Capacitors in uF unless otherwise specified
3. Capacitors 600V unless otherwise specified
4. Voltages measured with DVM with 125VAC at wall
5. There is no C1

Tube Location Chart
110-125VAC 60 Watts 50 or 60 Cycles

V5	V4	V3	V2	V1
5V4GA	6V6GT		12AX7A/12AY7	

Line: Gibson
Model: GA-6r3
Triple R Version DC1
Schematic: Miles O'Neal
Date: 11 Nov 2005

Copyright 2005, Miles O'Neal, Austin, TX. All rights reserved.