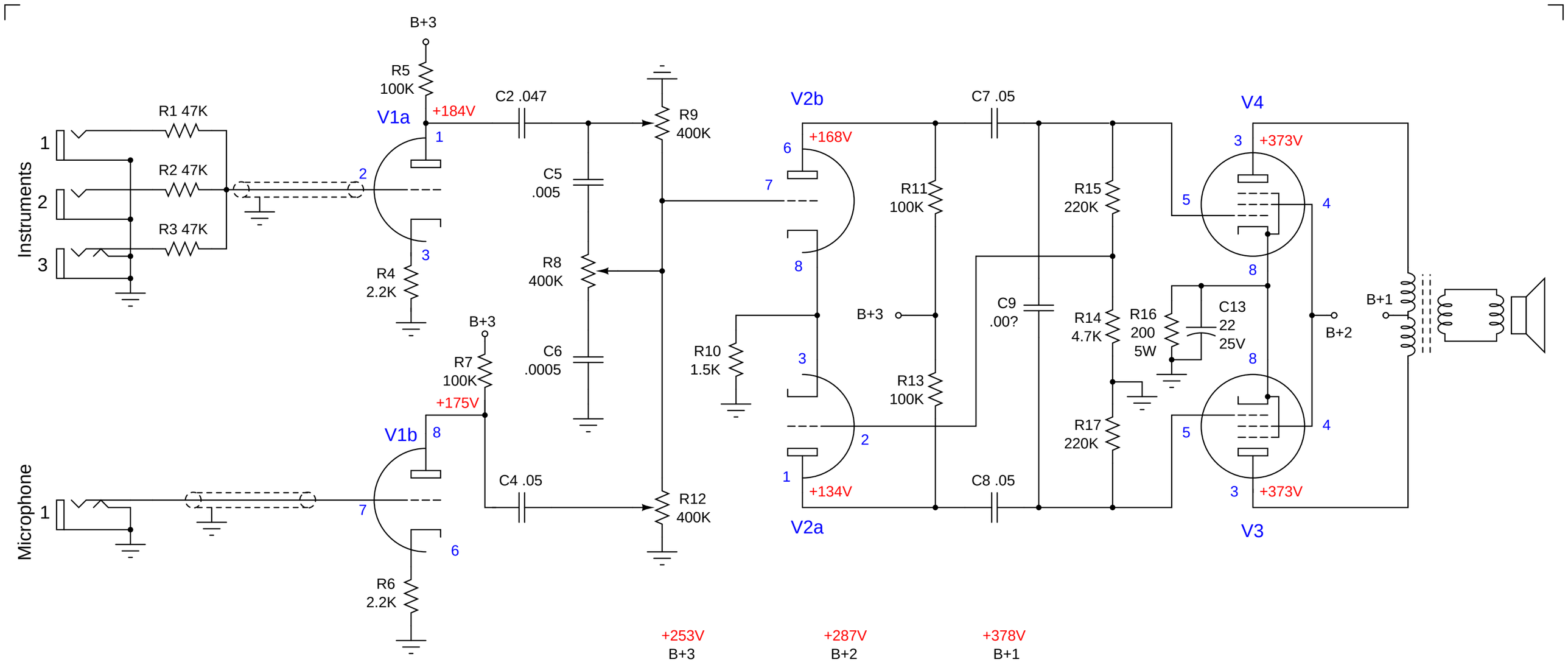

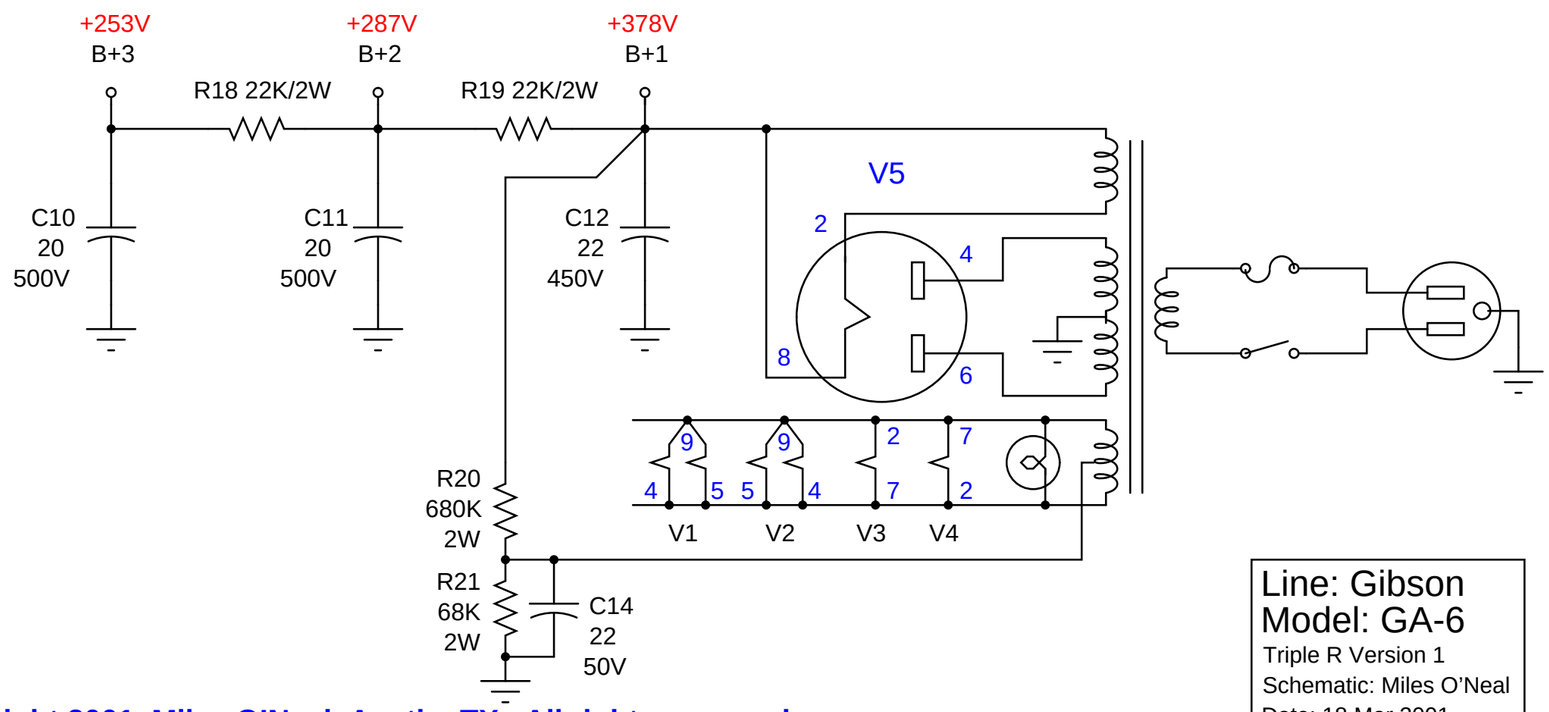

NOTES

1. Resistors 1/2 watt unless otherwise specified
2. Capacitors in uF unless otherwise specified
3. Capacitors 600V unless otherwise specified
4. Voltages measured with DVM with 125VAC at wall
5. There is no C3

Tube Location Chart

110-125VAC 60 Watts 50 or 60 Cycles

V5	V4	V3	V2	V1
5Y3	6V6GT		12AX7A	

Line: Gibson
Model: GA-6
Triple R Version 1
Schematic: Miles O'Neal
Date: 18 Mar 2001

Copyright 2001, Miles O'Neal, Austin, TX. All rights reserved.