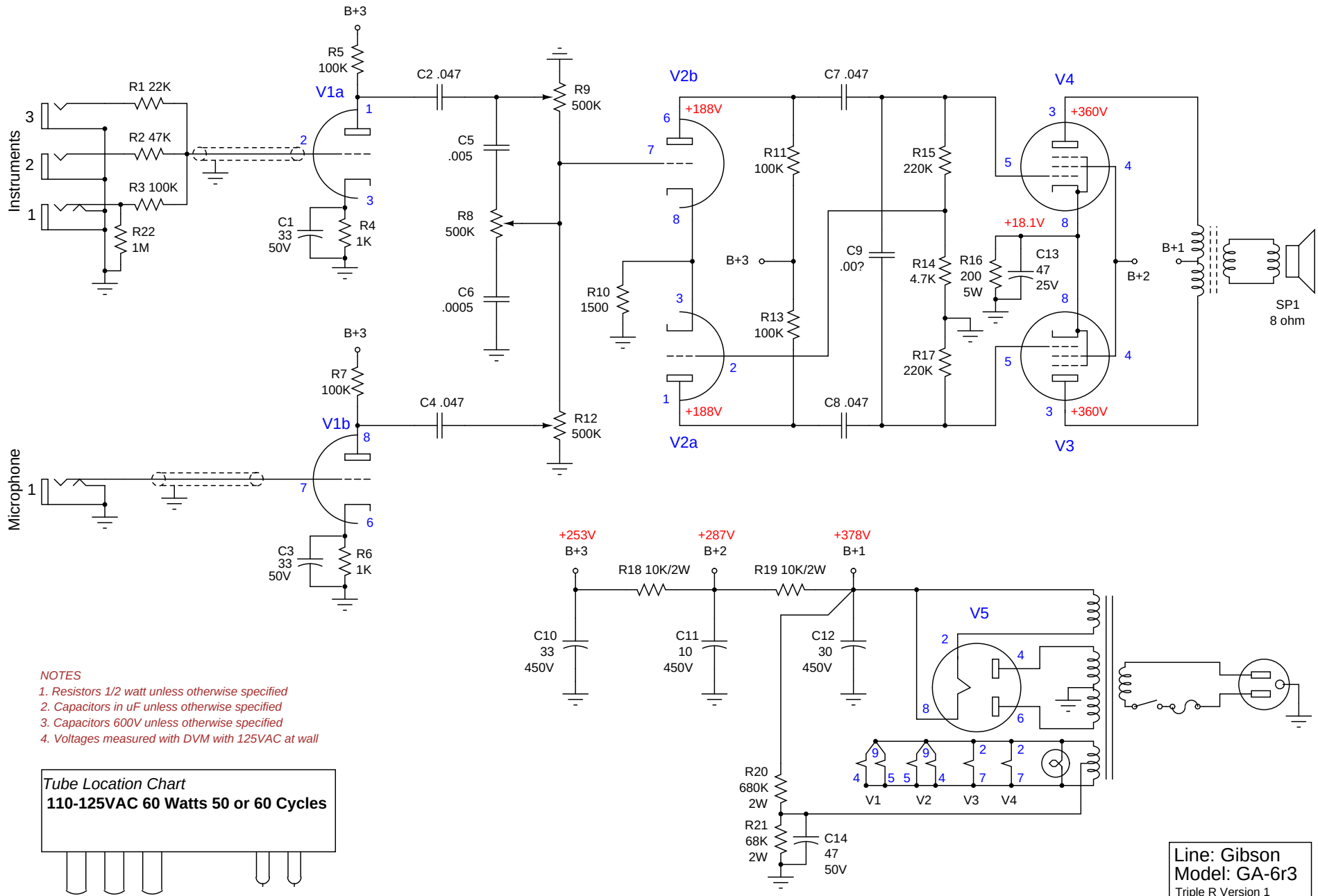

NOTES

1. Resistors 1/2 watt unless otherwise specified
2. Capacitors in uF unless otherwise specified
3. Capacitors 600V unless otherwise specified
4. Voltages measured with DVM with 125VAC at wall

Tube Location Chart
110-125VAC 60 Watts 50 or 60 Cycles

V5	V4	V3	V2	V1
5V4GA	6V6GT		12AX7A	

Line: Gibson
Model: GA-6r3
Triple R Version 1
Schematic: Miles O'Neal
Date: 4 Apr 2002

Copyright 2002, Miles O'Neal, Austin, TX. All rights reserved.