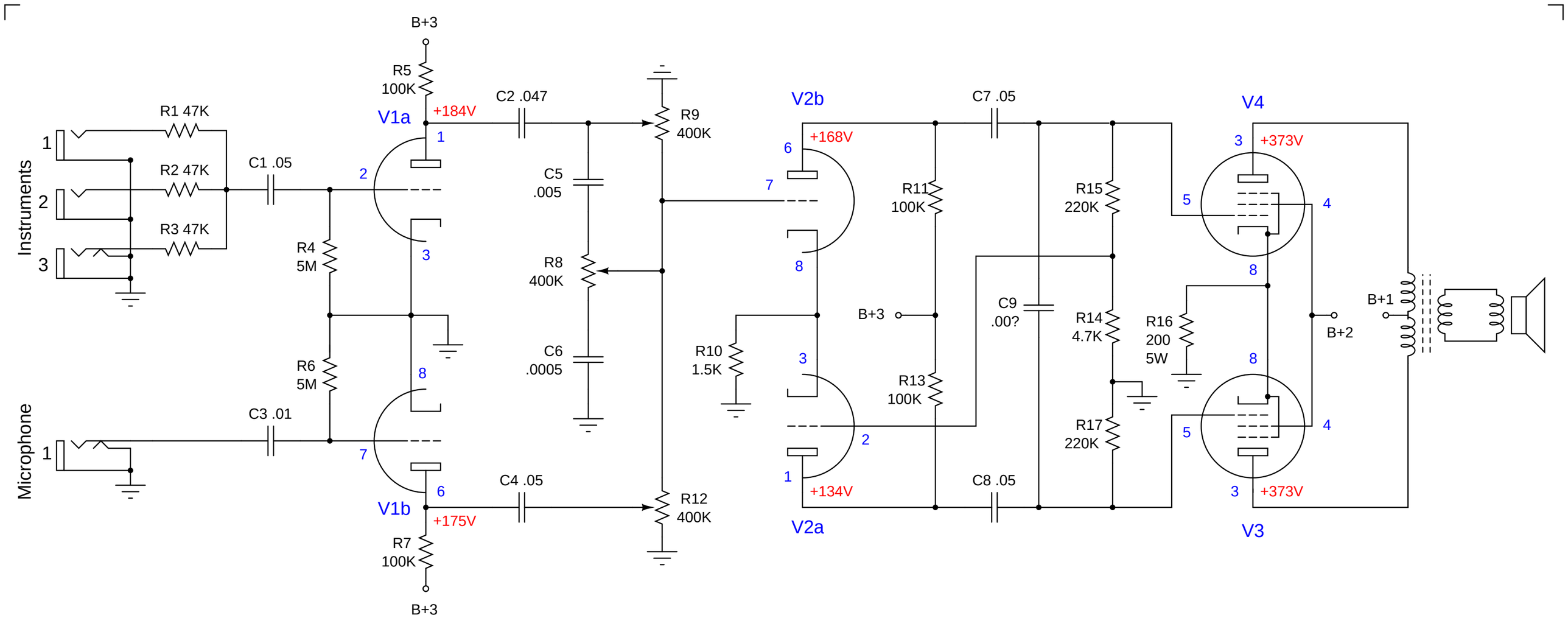

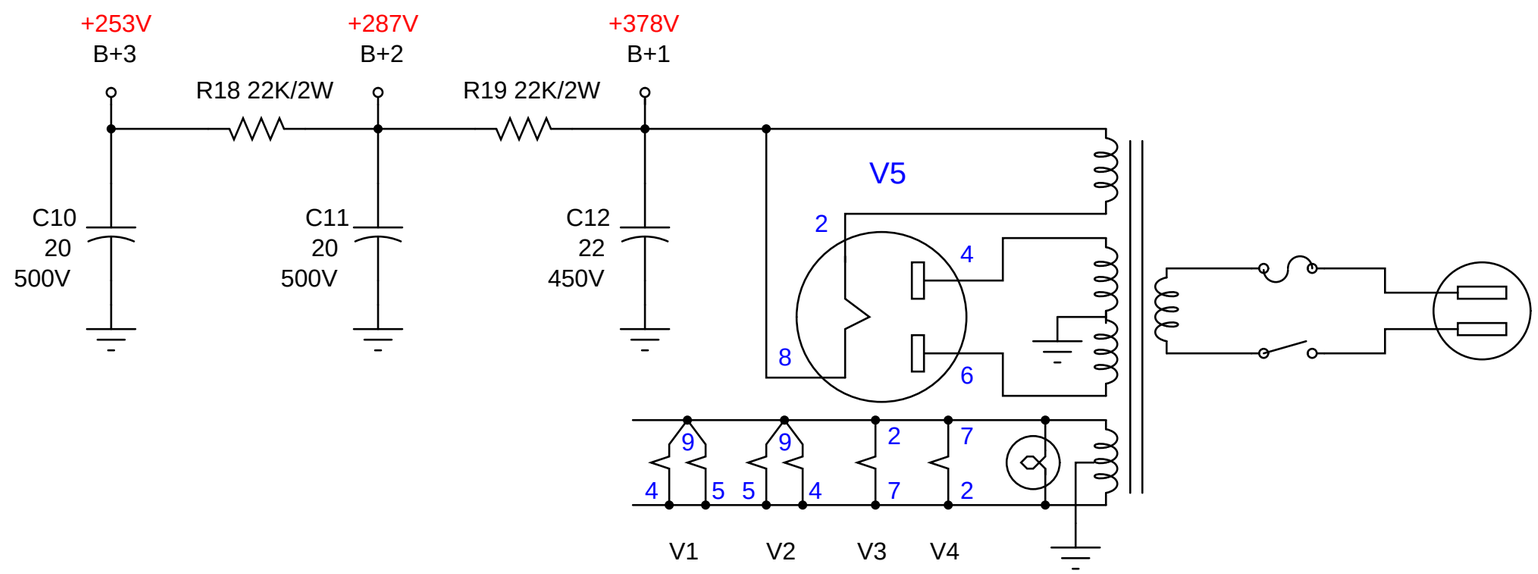

NOTES

1. Resistors 1/2 watt unless otherwise specified
2. Capacitors in uF unless otherwise specified
3. Capacitors 600V unless otherwise specified
4. Voltages measured with DVM with 125VAC at wall

Tube Location Chart

110-125VAC 60 Watts 50 or 60 Cycles

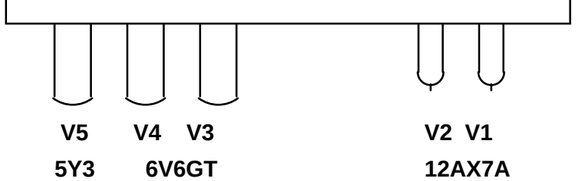

Line: Gibson
Model: GA-6
Schematic: Miles O'Neal
Date: 9 Mar 2001

Copyright 2001, Miles O'Neal, Austin, TX. All rights reserved.