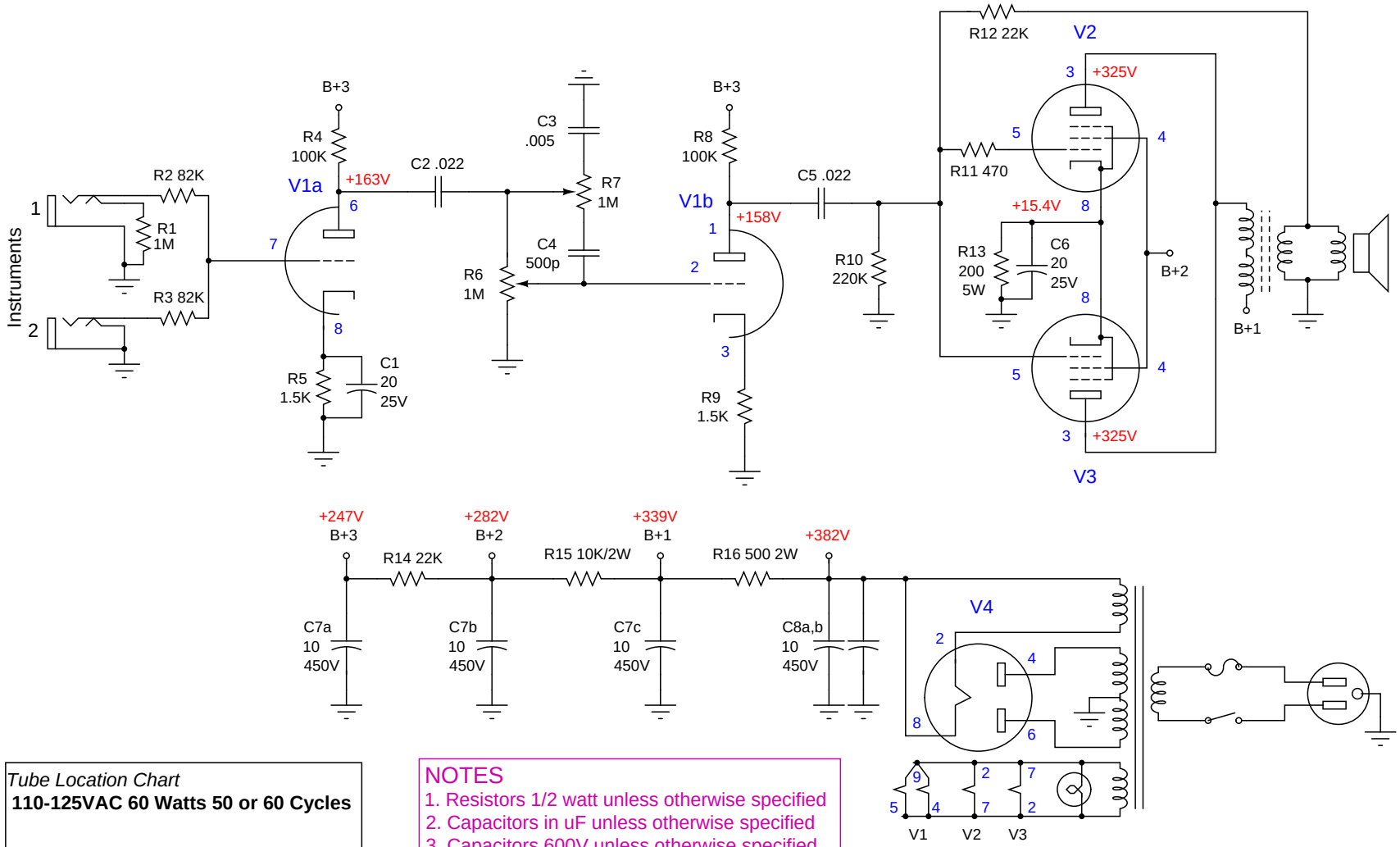

Tube Location Chart

110-125VAC 60 Watts 50 or 60 Cycles

V4	V3	V2	V1
5U3	6V6GT	6V6GT	12AX7A

NOTES

1. Resistors 1/2 watt unless otherwise specified
2. Capacitors in uF unless otherwise specified
3. Capacitors 600V unless otherwise specified
4. Voltages measured with DVM with 125VAC at wall
5. Output is parallel, has only 1 grid-stopper.

Copyright 2003, Miles O'Neal, Austin, TX. All rights reserved.

Line: Gibson
Model: GA-9

Schematic: Miles O'Neal
Date: 5 Jul 2003